TELEPHONE: SERVICE (44) 01332 875665
FAX: SERVICE (44) 01332 875536

INSTRUCTIONS

ELECTRIC FRYERS
MODELS:

NPSF3, NPSF6, NPSF9
NPDF3, NPDF6, NPDF9
NPSPF3, NPSPF6, NPSPF9
NPDPF3, NPDPF6, NPDPF9

SAFETY INSTRUCTIONS

TECHNICAL DATA

INSTALLATION INSTRUCTIONS

OPERATION INSTRUCTIONS

MAINTENANCE INSTRUCTIONS

EXPLODED VIEW / PARTS LIST

FAULT DIAGNOSTICS

WIRING DIAGRAM

WARRANTY INFORMATION

DISPOSAL INFORMATION

Customer Information

MODEL NUMBER: _____
SERIAL NUMBER: _____
PURCHASE DATE: _____
DISTRIBUTOR: _____

Parry Group Limited, Town End Road, Draycott, Derby, England DE72 3PT
www.parry.co.uk

TELEPHONE: SERVICE (44) 01332 875665
FAX: SERVICE (44) 01332 875536

SAFETY INSTRUCTIONS

IMPORTANT, PLEASE READ INSTRUCTIONS FULLY BEFORE USE

These appliance have been designed to fry food using cooking oil and therefore during its use parts of the appliance will become very hot. All personnel must be given sufficient supervision and training in the safe use of this appliance.

ALL APPLIANCES OTHER THAN THOSE FITTED WITH A SEALED MOULDED PLUG MUST BE FITTED BY A QUALIFIED ELECTRICIAN, IN ACCORDANCE WITH CURRENT REGULATIONS.

The unit should be installed in compliance with the INSTALLATION INSTRUCTIONS and the NATIONAL REGULATIONS in force at the time. Particular attention should be paid to the Health and Safety at Work Act.

To prevent shocks, all appliances whether gas or electric, must be earthed.

To avoid scratching the highly polished exterior surface of this equipment whilst in transit, the protective film on the exterior surfaces has NOT been removed.

It is IMPORTANT that this protective film is peeled off before the equipment is used.

ENSURE THE APPLIANCE IS ISOLATED FROM THE POWER SUPPLY BEFORE INSTALLING, CLEANING OR MAINTAINING THE APPLIANCE

These products have been designed, constructed and marketed in compliance with safety requirements of :
EEC Directive “Low voltage” 73/23;
EEC Directive 93/68.

This product is suitable for contact with foodstuffs, and complies with **EEC Directive 89/109.**

The product(s) stated above are designed and built to comply with the following standards:
BS EN 60335-1

TELEPHONE: SERVICE (44) 01332 875665
FAX: SERVICE (44) 01332 875536

TECHNICAL DATA

NPSF3,6,9

	NPSF3	NPSF6	NPSF9
Nominal Voltage	240v 50Hz ~ AC	240v 50Hz ~ AC (415v 50Hz ~ 3 Ph+N)	
Nominal Current (Amps)	12.5a	25a (8.33a per Ph)	37.5a (12.5a per Ph)
Nominal Wattage (Watts)	3000w	6000w	9000w
Oil Capacity	11 Litres		
External Dimensions (W x D x H mm)	300 x 600 x 300 (To top of fryer head 460)		
Weight: (kg)	17kg	17kg	17kg

NPDF3,6,9

	NPDF3 Per Head	NPDF6 Per Head	NPDF9 Per Head
Nominal Voltage	240v 50Hz ~ AC	240v 50Hz ~ AC 415v 50Hz ~ 3 Ph+N	
Nominal Current (Amps)	12.5a	25a (8.33a per Ph)	37.5a (12.5a per Ph)
Nominal Wattage (Watts)	3000w	6000w	9000w
Oil Capacity	11 Litres (Per tank)		
External Dimensions (W x D x H mm)	600 x 600 x 300 (To top of fryer head 460)		
Weight: (kg)	28kg	28kg	28kg

NPSPF3,6,9

	NPSPF3	NPSPF6	NPSPF9
Nominal Voltage	240v 50Hz ~ AC	240v 50Hz ~ AC 415v 50Hz ~ 3 Ph+N	
Nominal Current (Amps)	12.5a	25a (8.33a per Ph)	37.5a (12.5a per Ph)
Nominal Wattage (Watts)	3000w	6000w	9000w
Oil Capacity	11 Litres		
External Dimensions (W x D x H mm)	300 x 600 x 900 (To top of fryer head 1160)		
Weight: (kg)	22kg	22kg	22kg

TELEPHONE: SERVICE (44) 01332 875665
FAX: SERVICE (44) 01332 875536

NPDPF3,6,9

	NPDPF3 Per Head	**NPDPF6** Per Head	**NPDPF9** Per Head
Nominal Voltage	240v 50Hz ~ AC	Per Head 240v 50Hz ~ AC 415v 50Hz ~ 3 Ph+N	
Nominal Current (Amps)	12.5a	25a (8.33a per Ph)	37.5a (12.5a per Ph)
Nominal Wattage (Watts)	3000w	6000w	9000w
Oil Capacity	11 litres (Per tank)		
External Dimensions (W x D x H mm)	600 x 600 x 900 (To top of fryer head 1160)		
Weight: (kg)	34kg	34kg	34kg

INSTALLATION INSTRUCTIONS

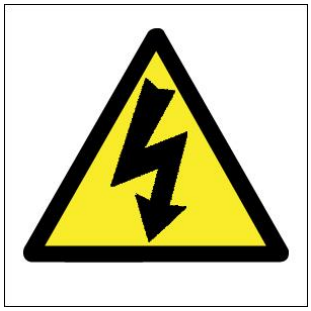

ELECTRICAL INSTALLATION

ALL APPLIANCES OTHER THAN THOSE FITTED WITH A SEALED MOULDED PLUG MUST BE FITTED BY A QUALIFIED ELECTRICIAN, IN ACCORDANCE WITH CURRENT REGULATIONS.

WARNING

To avoid scratching the highly polished exterior surface of this equipment whilst in transit, the protective film on the exterior surfaces has NOT been removed.

It is IMPORTANT that this protective film is peeled off before the equipment is used.

1. All electrical appliances/parts must be earthed.
2. No user-serviceable parts.
3. Isolate power supply before carrying out any installation work.

TELEPHONE: SERVICE (44) 01332 875665
FAX: SERVICE (44) 01332 875536

INSTALLATION

1. Choose a suitable site for your machine taking into consideration its, use, and any heat that may be generated whilst in service.

2. Remove all protect film and packing material, and inspect for any damage which may effect the machine's electrical safety.

3. Please find enclosed 4 x shelf adhesive rubber feet (Table top fryers only) . There are 4 dimples on the base of the unit where each foot must be placed.

4. All appliances with an electrical loading above 3 kilowatts must be connected to a suitable supply by qualified electrician, who should ensure that

   a) Precaution is taken during installation regarding leakage current,
   b) The means of isolation has a contact separation of at least 3mm on all poles, and
   c) It is installed in accordance with Health and Safety at Work Act, BS Codes of Practice, IEE Wiring Regulations and Building and Local Authority Standards.

OPERATION

1. Ensure all packaging has been removed and the tank has been cleaned thoroughly before filling with oil. Check the drain tap is in the fully closed position and the batter plate provided is fitted on top of the element.

2. Fill the tank with a good quality cooking oil, animal fat may be used but must be melted first before pouring into the tank, fill to the level mark indicated on the front of the heating element. **Do not mix oil and fat**

3. With the thermostat in the off position turn on the mains supply to the unit, the red lamp will indicate that the power is on.

4. Turn the thermostat to the desired setting; the green lamp will illuminate showing that there is power to the element, this will extinguish when the desired temperature is reached. This procedure will be repeated automatically as the thermostat maintains a constant temperature.

5. All models are fitted with a mechanical timer. This is used as a guide only, please note that it will not cut off the power to the element.

6. Do not overfill the cooking basket.

TELEPHONE: SERVICE (44) 01332 875665
FAX: SERVICE (44) 01332 875536

GUIDE TO FOOD COOKING TEMPERATURES ALL MACHINES

This is only intended as a guide and best results will be obtained with experience.

CHICKEN AND CHIPS (BLANCHING)	- 140℃ - 160℃
FISH FILLETS, CHOP CUTLETS	- 160℃
FRITTERS, SCAMPI	- 180℃
CHIPS	- MAX

DRAINING AND CHANGING OIL ON PEDISTAL FRYERS

The life expectancy of the oil or fat will be lengthened if they are passed through a filter on a regular basis, and the fryer is turned down or off during periods when it is not in use.

NPSPF3, NPSPF6, NPSPF9, NPDPF3, NPDPF6 & NPDPF9
To drain the oil in the above models

1. Allow oil to cool
2. Ensure the power has been isolated
3. Open the door of the cabinet and place the bucket &strainer provided underneath the drain spout.
4. Open the drain valve and allow the oil to fill the bucket, do not overfill so that the bucket becomes unmanageable.

DRAINING AND CHANGING OIL ON BENCH TOP FRYERS

NPSF3, NPSF6, NPSF9, NPDF3, NPDF6 & NPDF9
On all other models the drain tap is situated on the front of the machine & the following procedure should be adhered to

1. Allow oil to cool
2. Ensure the power has been isolated
3. Remove the finger tight bung from the drain and fix the spout provided to the drain
4. Place a clean suitable receptacle underneath the spout
5. Lift up the safety catch & slide the arm of the drain tap across to allow the oil to flow.

TELEPHONE: SERVICE (44) 01332 875665
FAX: SERVICE (44) 01332 875536

MAINTENANCE INSTRUCTIONS

ENSURE THE APPLIANCE IS ISOLATED FROM THE POWER SUPPLY BEFORE INSTALLING, CLEANING OR MAINTAINING THE APPLIANCE

Ensure that the appliance has cooled sufficiently.

Cleaning should be carried every day. Clean the external surfaces of the appliance with a damp cloth. Avoid using abrasive materials.

Appliance should be annually P.A.T (Portable Appliance Testing) tested for continued electrical safety.

CLEANING

CAUTION
Never clean the appliance with water jets.

Once the oil has been drained remove the control head from the bowl and wash the bowl and the drain with hot soapy water, rinse and dry thoroughly.
Close the drain tap & replace the drain bung.
Clean around the element and batter plate, then replace back into the bowl.
The oil can then be poured back into the bowl.
Top up with clean oil as necessary.

All equipment should be kept absolutely clean; under no circumstances must food particles be allowed to congeal on baskets or elements as this will cause foaming due to the particles continuously cooking.

Periodically you will need to replace the cooking medium, do this when discolouration, odour, surging or stray tastes indicate this; again, experience is your best guide, but remember that more frequent changes will be required when different foods are cooked in the same medium.

TELEPHONE: SERVICE (44) 01332 875665
FAX: SERVICE (44) 01332 875536

Old oil has a reduced flash point and is more prone to surge boiling.
Attention is also drawn to the effect of over-wet food and too large a charge on surge boiling.

Treat your fryer with the utmost respect with regard to safety, as hot cooking oil is a very hazardous substance.

Never use the lid while the fryer is switched on or is cooling off. It is only a dust cover for when the fryer is not in use.

N.B. Incorrect oil level, old oil or allowing the machine to be switched on without any oil, will cause the override switch to trip.

MAINTENANCE AND SERVICE MUST ONLY BE UNDERTAKEN BY A QUALIFIED ELECTRICIAN / ENGINEER

IF THE SUPPLY CORD BECOMES DAMAGED, IT MUST BE REPLACED BY THE MANUFACTURER, ITS SERVICE AGENT OR SIMILARLY QUALIFIED PERSONS IN ORDER TO AVOID A HAZARD

TELEPHONE: SERVICE (44) 01332 875665
FAX: SERVICE (44) 01332 875536

EXPLODED VIEW (Body Assembly)
NPSF3,6,9 & NPDF3,6,9

NPSF3 SHOWN BELOW

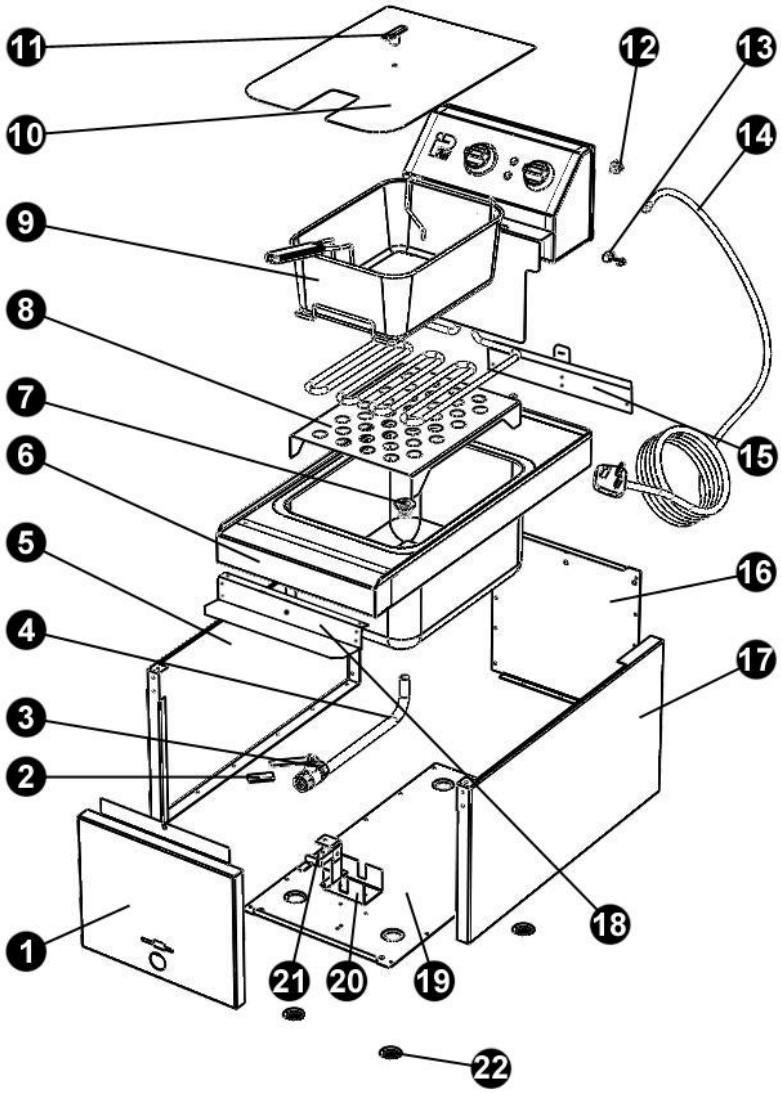

TELEPHONE: SERVICE (44) 01332 875665
FAX: SERVICE (44) 01332 875536

PARTS LIST (Body Assembly)
NPSF3,6,9 & NPDF3,6,9

No.	Description	Part Code	
		NPSF3,6,9	NPDF3,6,9
1	*Fascia	NPSF3FASCIA	NPDF3FASCIA
2	Handle Sleave	HANDLESLEEVE	
3	Ball Valve	VALVEB12N	
3a	15mm Olive	OLIVE0015	
3b	15mm Brass Nut Compression Nut	NUTCOMP15	
4	Drain Tube	TUBEFRYERN	
5	*LH Side Panel	NPSFLH3SIDEPANEL	
6	Tank Assembly	SEAMWELD1N	SEAMWELD2N
7	Bowl Insert	BOWLINSSS	
7a	Bowl Insert Washer	WAS14022	
7b	Bowl Insert Nut	NUT4BOWLSSS	
7c	15mm Olive	PLUGBSP12	
7d	Female Brass Nut	“ “	
8	*Batter Plate	*NEWPAPAGON3KWFRYERBA	
9	Basket C/W HANDLBASK	BASKETPRO	
10	*Lid	*PARAGONFRYERLID	
11	Lid Handle	TEEKNOB	
12	Star Knob	STARKNOB	
13	Strain Relief Bush (Only on 3kW)	BUSR06003	
14	Mains Cable (Only on 3kW)	MLEAD25	
15	*Back Hook	NPSFBACKHOOK	NPDFBACKHOOK
16	*Back Panel	NPSF3BACK	NPDF3BACK
17	*RH Side Panel	NPSF3RHSIDEPANEL	
18	*Front Support	NPSF3FRONTBRACE	NPDF3FRONTBRACE
19	*Base	NPSF3BASE	NPDF3BASE
20	*Drain Tube Guide	NPSF3DRAINTUBESUPPORT	NPDF3DRAINTUBESUPPORT
21	*Tap Bracket	TAPBRACKET	
	Rubber Stick on Foot	RUBBRFOOT	

TELEPHONE: SERVICE (44) 01332 875665
FAX: SERVICE (44) 01332 875536

EXPLODED VIEW (Body Assembly)
NPSPF3,6,9 & NPDPF3,6,9

NPSPF3 SHOWN BELOW

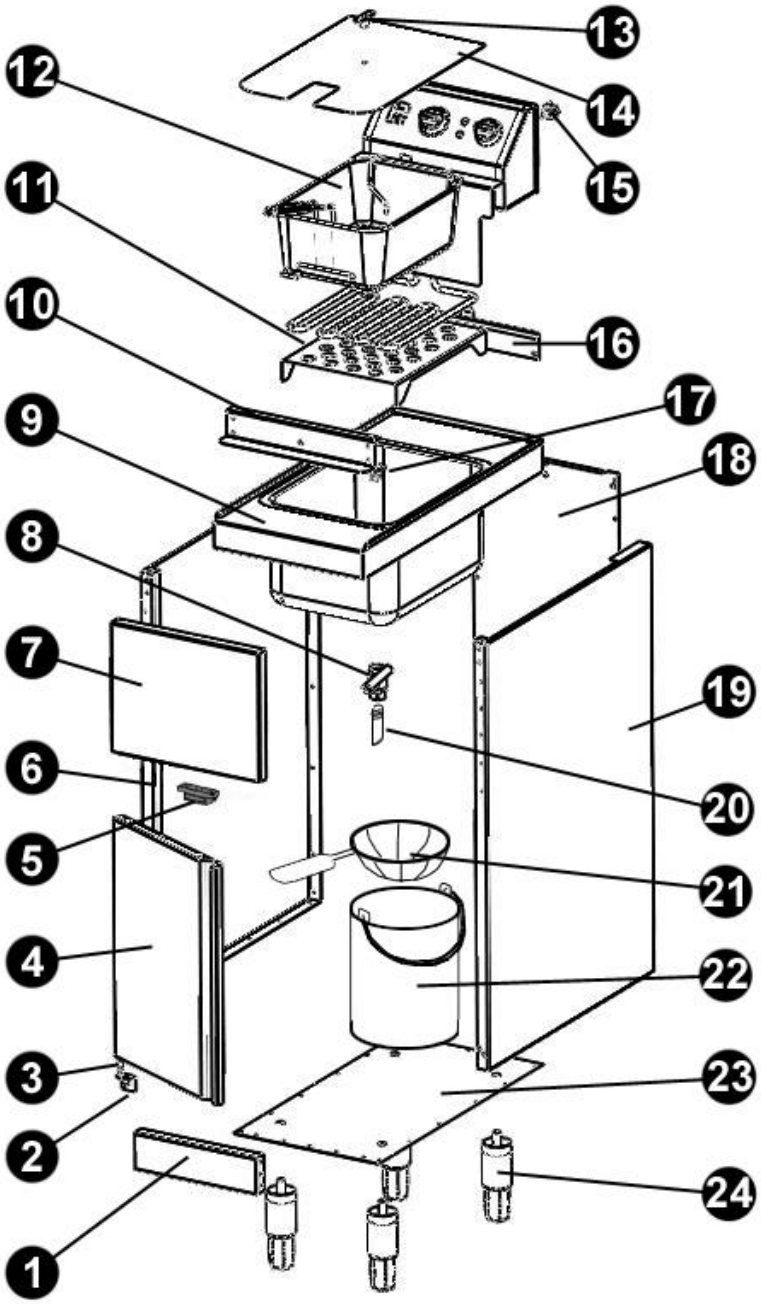

TELEPHONE: SERVICE (44) 01332 875665
FAX: SERVICE (44) 01332 875536

PARTS LIST (Body Assembly)
NPSPF3,6,9 & NPDPF3,6,9

No.	Description	Part Code	
		NPSF3,6,9	NPDF3,6,9
1	*Bottom Panel	*NPSPFLWRP	*NPDPFLWRP
2	LH Hinge Plate	LCPPDGFHINGE	
3	Hinge Pin	PNST00127	
4	*Door Assembly	*NPSPFDOORASSY	*NPDPFDOORASSY
5	Magnet	NPMAGNET	
6	*LH Side Panel	*NPSPFLHSIDP	
7	*Top Panel	*NPSFFAS	*NPDPFFAS
8	Ball Valve	VALVEB12N	VALVEB12N
9	Tank	SEAMWELD1N	SEAMWELD2N
10	*Front Support	*NPSF3FRONTBRACE	*NPDF3FRONTBRACE
11	*Batter Plate	*NEWPAPAGON3KWFRYERBA	
12	Basket C/W HANDLBASK	BASKETPRO	
13	Lid Handle	TEEKNOB	
14	*Lid	*PARAGONFRYERLID	
15	Star Knob	STARKNOB	
16	*Back Hook	*NPSFBACKHOOK	*NPDFBACKHOOK
17	Bowl Insert	BOWLINSSL	
17a	Bowl Insert Washer	WAS14022	
17b	Bowl Insert Nut	NUT4BOWLSSS	
18	Back Panel	*NPSPFBAK	*NPDPFBAK
19	*RH Side Panel	*NPSPFRHSIDP	
20	Drain Tube	TUBETRAN4	
21	Strainer	BKST14916	
22	Aluminium Bucket	BKAL0001	
23	*Base	*NPSPFBASE	*NPDPFBASE
24	Leg	LEG50-100PLT	LEG50-100HEX

TELEPHONE: SERVICE (44) 01332 875665
FAX: SERVICE (44) 01332 875536

EXPLODED VIEW (Head Assembly)
NPSF3, NPDF3 NPSPF3, NPSDF3

NPSF3 SHOWN BELOW

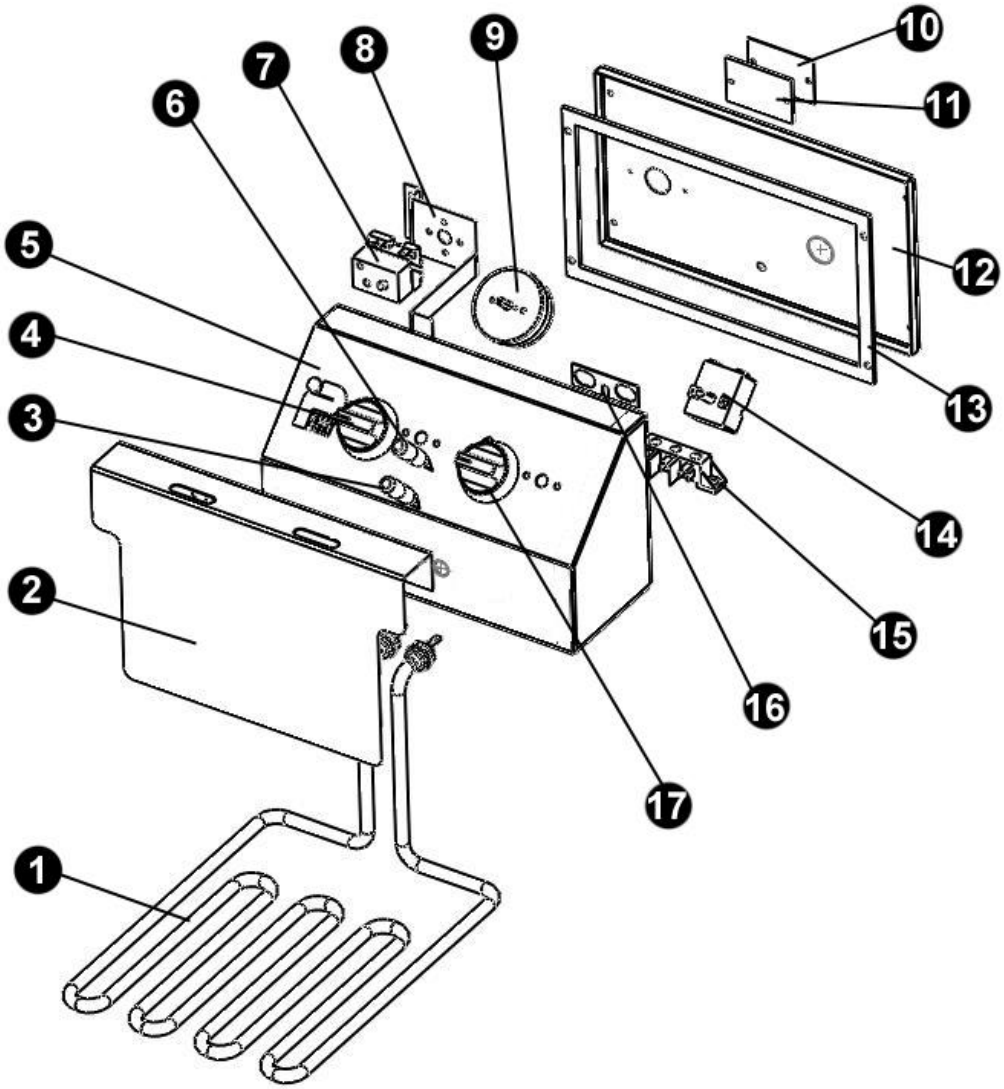

TELEPHONE: **SERVICE (44) 01332 875665**
FAX: **SERVICE (44) 01332 875536**

PARTS LIST (Head Assembly)
NPSF3, NPDF3 NPSPF3, NPSDF3

No.	Description	Part Code
		NPSF3 / NPDF3 / NPSPF3 / NPDPF3
1	Element	ELFF03000
2	*Element Shroud	*PARAGON3KWFRYERHEADE
3	Green Neon	LNGN2211P
4	Timer Knob	TIMERKNOB
5	*Head Body c/w End Caps	NPSF3HEADWRAP
6	Red Neon	LNRE2211P
7	Safety Cut Out Thermostat	TMST10549
8	*Safety Cut Out Thermostat Bracket	NPSFSAFCUTTHBKT
9	20 Minute Timer	TMRMECH20
10	*Reset Cover	NPSFOTRC
11	Reset Cover Gasket	GASKCOVER
12	*Head Back	NPSF3FRYHBAK
13	Fryer Head Gasket	GASKPR69F
14	Thermostat	TMST13032
15	Terminal Block	TB3POLETB
16	Element Gasket	AS3510PLT
17	Thermostat Knob	KNOBPHEN
	Element Clip	CLIP15960

TELEPHONE: SERVICE (44) 01332 875665
FAX: SERVICE (44) 01332 875536

EXPLODED VIEW (Head Assembly)
NPSF6,9, NPDF6,9, NPSPF6,9, NPSDF6,9

NPSF6,9 SHOWN BELOW

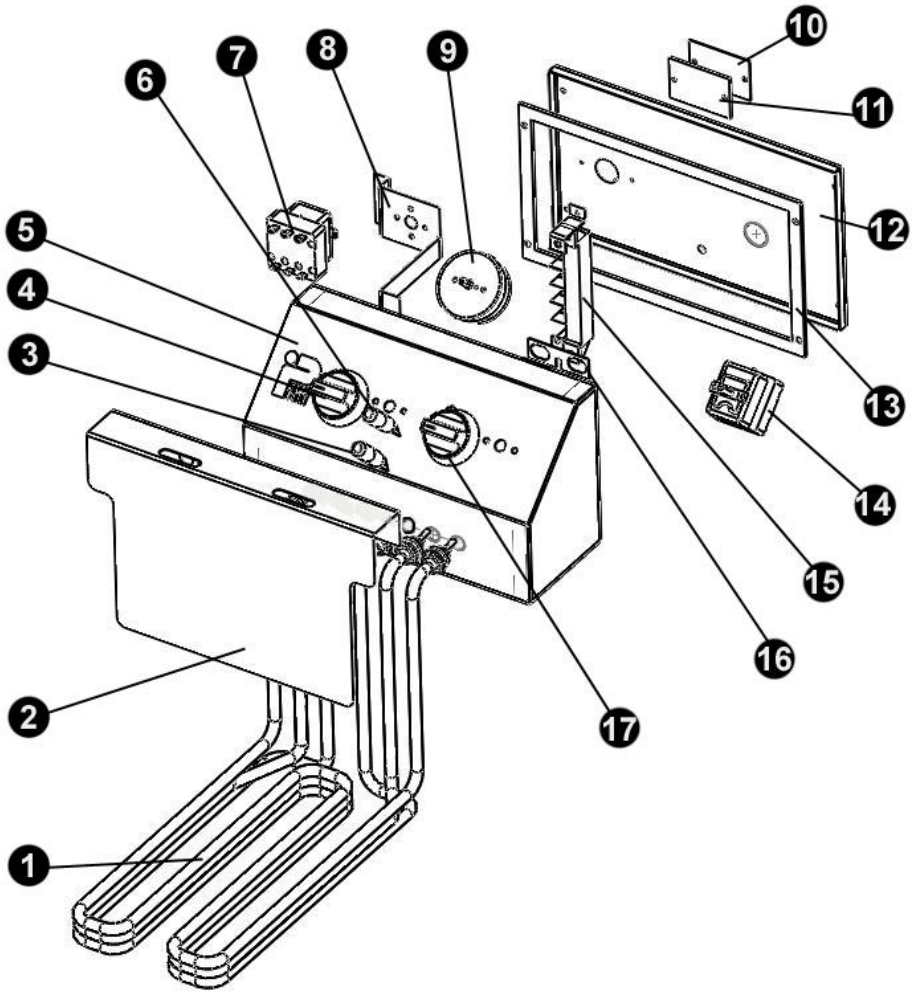

TELEPHONE: SERVICE (44) 01332 875665
FAX: SERVICE (44) 01332 875536

PARTS LIST (Head Assembly)
NPSF6,9 & NPDF6,9

No.	Description	Part Code	
		NPSF6 / NPSFP6 NPDF6 / NPDPF6	NPSF9 / NPSFP9 NPDF9 / NPDPF9
1	Element	ELDF06003	ELDF09003
2	*Element Shroud	*NPSF6-9SHROUD	
3	Green Neon	LNGN2211P	
4	Timer Knob	TIMERKNOB	
5	*Head Body c/w End Caps	*NPSF6-9HEADWRAP	
6	Red Neon	LNRE2211P	
7	Safety Cut Out Thermostat	TMST32542	
8	*Safety Cut Out Thermostat Bracket	*NPSFSAFCUTTHBKT	
9	20 Minute Timer	TMRMECH20	
10	*Reset Cover	*NPSFOTRC	
11	Reset Cover Gasket	GASKCOVER	
12	Head Back	*NPSF6-9HEADBACK	
13	Fryer Head Gasket	GASKPR69F	
14	Thermostat	TMST34034	
15	Terminal Block	TB6POLETB	
16	Element Gasket	*AS3510PLT	
17	Thermostat Knob	KNOBPHEN	
		CLIP15960	

TELEPHONE: SERVICE (44) 01332 875665
FAX: SERVICE (44) 01332 875536

WIRING DIAGRAM
NPSF3 / NPSPF3 / NPDF3 / NPDPF3

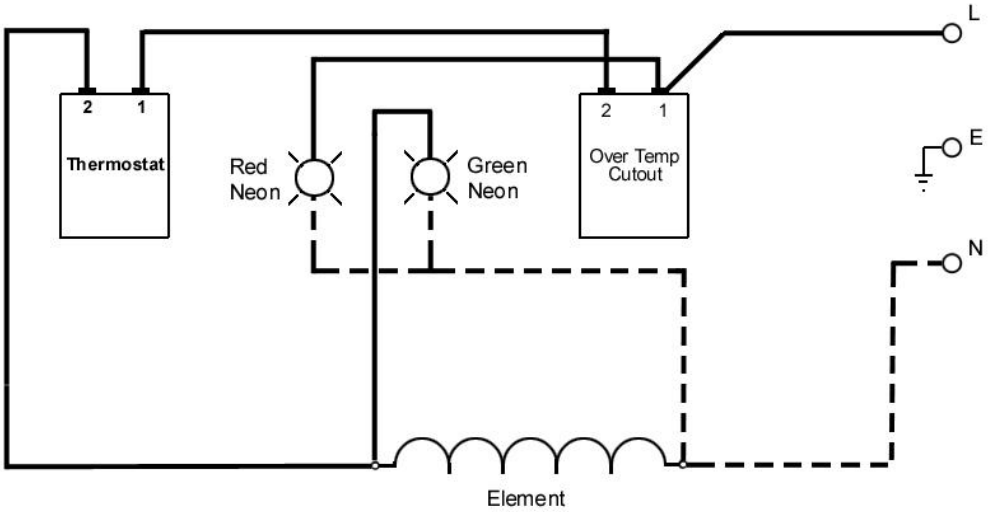

WIRING DIAGRAM
NPSF6,9 / NPSPF6,9 / NPDF6.9 / NPDPF6,9

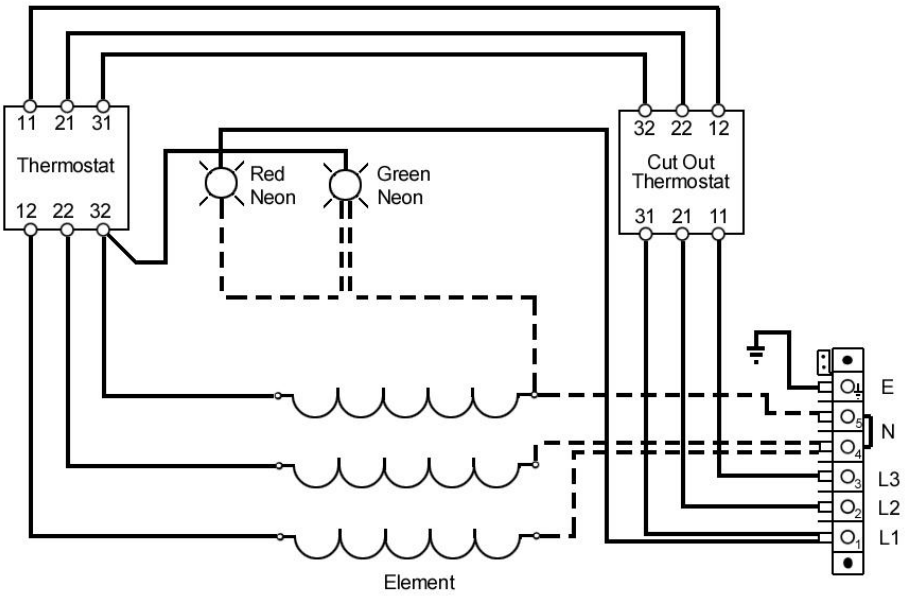

TELEPHONE: SERVICE (44) 01332 875665
FAX: SERVICE (44) 01332 875536

WARRANTY INFORMATION

WARRANTY POLICY

- The manufacturers warranty is only valid in the UK mainland & Northern Ireland, Western Isles, Inner Hebrides and Islands are parts only warranty.
- All service calls will be carried out between the hours of 8.00am – 5.00pm Monday to Friday only.
- We accept no responsibility for delays in replacing or repairing the equipment due to circumstances beyond our control.
- Your warranty can be immediately invalid if the installation of the equipment has not been installed in accordance with the manufacturers' instruction. (See installation details). Also the miss-use, alteration or unauthorised repairs of the equipment will invalidate the warranty.
- During the warranty period it is at Parrys Group Ltd discretion to repair or replace the equipment.
- Warranty only applies if the equipment has been used in a professional manor following the manufacturers' instructions and maintenance guide lines.
- The warranty covers defects in the material and components failure only we are not liable for trading loss, loss of perishable items, water damage, loss due to injury or fire damage.

WARRANTY REQUEST

- Please ensure you have referred to the manufacturers' instruction before placing a warranty call with your distributor.
- Please ensure you obtain the model number before calling.
- Please ensure you have read the section not covered under warranty to avoid any unnecessary warranty charges.
- If the problem with the machine can not be resolved please contact the company that supplied you the machine.

(SERVICE CALLS CANNOT BE PLACED DIRECT WITH PARRY GROUP LTD)

TELEPHONE: SERVICE (44) 01332 875665
FAX: SERVICE (44) 01332 875536

NOT COVERED UNDER WARRANTY

- Installed incorrectly
- Fault due to poor maintenance.
- Resetting of equipment or circuit breakers.
- Abuse of the equipment
- Blockages eg, drains,
- Lime scale related issues
- Access arranged for service call and engineer refused access or customer not there.
- No faults with the machine.
- Setting up of equipment.
- Faulty electrics – eg, customers plug socket, plug, wiring, junction box fault, wrong fuse.
- Any damages caused by the customer.

All of the above are not covered under our warranty policy. Any costs incurred because of the above will be forwarded to the parties responsible for placing the call.

Failure to pay any warranty charges will result in the customers warranty been put on hold until the bill has been settled.

Any issues regarding the raised charges should be put in writing to our warranty department for further investigation.

TELEPHONE: **SERVICE (44) 01332 875665**
FAX: **SERVICE (44) 01332 875536**

DISPOSAL INFORMATION

This appliance is marked according to the **European directive 2002/96/EC** on **Waste Electrical and Electronic Equipment (WEEE)**.
By ensuring this product is disposed of correctly, you will help prevent potential negative consequences for the environment and human health, which could otherwise be caused by inappropriate waste handling of this product.

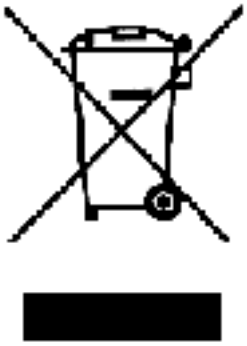

A symbol on the product, or on the documents accompanying the product, indicates that this appliance may not be treated as household waste. Instead it shall be handed over to the applicable collection point for the recycling of electrical and electronic equipment.

Disposal must be carried out in accordance with local environmental regulations for waste disposal.

For more detailed information about treatment, recovery and recycling of this product, please contact your local city office, your household waste disposal service or the shop where you purchased the product.

TELEPHONE: SERVICE (44) 01332 875665
FAX: SERVICE (44) 01332 875536

Parry Catering recognises our obligations to the **EU DIRECTIVE** covering the waste disposal of electrical and electronic equipment **(WEEE)**, Parry Catering are committed to this policy in order to help conserve the environment.

At the end of this unit's life you **MUST** dispose of it in an approved manner. You **MUST** not discard the unit or place it in the refuse bin.

You have several options:

a) Take the unit to an approved WEEE scheme company, there will be one in your area.

b) Take the unit to an approved waste disposal site; many sites are managed by your local authority.

Contact the Parry Group Ltd on the Sales number 01332 875544 for further information on disposal.

There will probably be a charge for this service which will depend on the physical location of the unit and size you will be given a collection price for a curb side collection based on commercial rates prevailing at the time.

It should be noted that the unit to be collected should be suitably packed and sealed to prevent dangerous gases and fluids from escaping. The condition of the unit must also be clean to comply with health and safety regulations.