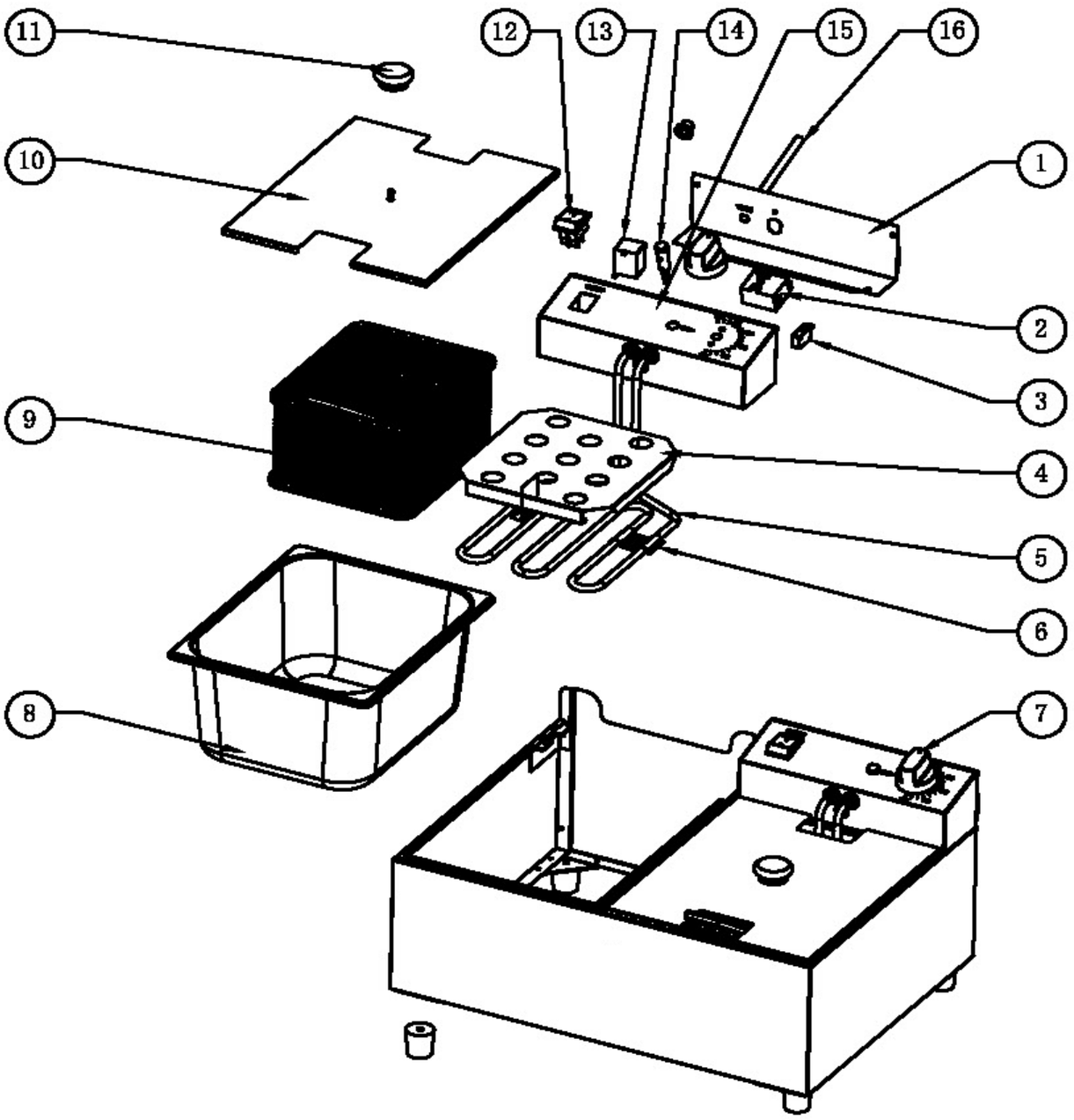

Machine	Explode	Code	Description
FC257 - Buffalo Double Fryer - 2x5Ltr 2x2.8kW	1	☎	Electric Box Back Cover
FC257 - Buffalo Double Fryer - 2x5Ltr 2x2.8kW	2	N116	Thermostat
FC257 - Buffalo Double Fryer - 2x5Ltr 2x2.8kW	3	AH342	Switch
FC257 - Buffalo Double Fryer - 2x5Ltr 2x2.8kW	4	☎	Baffle Plate
FC257 - Buffalo Double Fryer - 2x5Ltr 2x2.8kW	5	N281	Heating Element
FC257 - Buffalo Double Fryer - 2x5Ltr 2x2.8kW	6	☎	Sensor Clamp
FC257 - Buffalo Double Fryer - 2x5Ltr 2x2.8kW	7	AK361	Knob
FC257 - Buffalo Double Fryer - 2x5Ltr 2x2.8kW	8	N120	Oil Pan
FC257 - Buffalo Double Fryer - 2x5Ltr 2x2.8kW	9	N283	Basket
FC257 - Buffalo Double Fryer - 2x5Ltr 2x2.8kW	10	AK365	Cover Assy
FC257 - Buffalo Double Fryer - 2x5Ltr 2x2.8kW	11	☎	Handle
FC257 - Buffalo Double Fryer - 2x5Ltr 2x2.8kW	12	AH040	Swicth
FC257 - Buffalo Double Fryer - 2x5Ltr 2x2.8kW	13	N117	Breaker
FC257 - Buffalo Double Fryer - 2x5Ltr 2x2.8kW	14	AD585	Indicator Light
FC257 - Buffalo Double Fryer - 2x5Ltr 2x2.8kW	15	AK563	Complete Fryer Head/Electrical Box Assy.
FC257 - Buffalo Double Fryer - 2x5Ltr 2x2.8kW	16	AK558	UK Plug & Lead

☎ Technical & Spares helpline 0845 111 0538
spares@uropa-service.co.uk